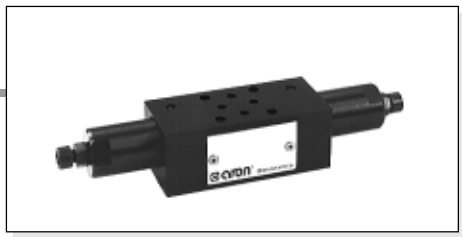

AM.2.VM...	
CMP.02...	CH. V PAGE 17
SCREWS AND STUDS	CH.IV PAGE 6

AM.2.VM... MODULAR MAXIMUM PRESSURE VALVES CETOP 2

AM.2.VM type pressure regulating valves are available with an operating pressure range of 4 to 250 bar.
Adjustment is via a grub screw. Two base versions are available: **AM.2.VM..** single on A or B, and double on A and B lines, with drainage on T; **AM.3.VM.P..** single on P line, with drainage on T.
4 different types of springs can be mounted on all versions, with the adjustment range specified in the specifications. The cartridge used is the CMP.02 type.

Max. operating pressure		250 bar
Setting ranges:	spring 1	30 bar
	spring 2	90 bar
	spring 3	180 bar
	spring 4	250 bar
Max. flow		20 l/min
Hydraulic fluids		Mineral oils DIN 51524
Fluid viscosity		10 ÷ 500 mm²/s a 50°C
Fluid temperature		-20°C ÷ 75°C
Max. contamination level		class 10 in accordance with NAS 1638 with filter $ß_{25}$≥75
Weight AM.2.VM.A/B/P...		0,53 Kg
Weight AM.2.VM.AB...		0,7 Kg

ORDERING CODE

AM — Modular valve

2 — CETOP 2/NG4

VM — Max. pressure valves

****** — Adjustment on the lines
A / B / P / AB

C — Type of adjustment
grub screw

***** — Setting ranges at port A/B/P
1 = max.30 bar **(white spring)**
2 = max.90 bar **(yellow spring)**
3 = max.180 bar **(green spring)**
4 = max.250 bar **(orange spring)**

***** — Setting ranges at port B
(Omit if the setting is same as that at port A)
1 = max.30 bar **(white spring)**
2 = max.90 bar **(yellow spring)**
3 = max.180 bar **(green spring)**
4 = max.250 bar **(orange spring)**

****** — **00** = No variant
V1 = Viton

1 — Serial No.

PRESSURE - FLOW RATE

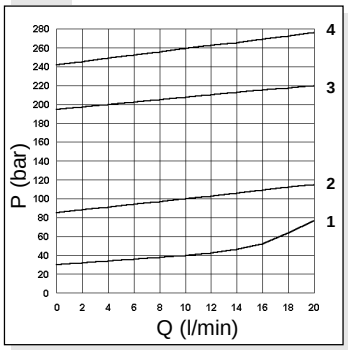

MINIMUM SETTING PRESSURE

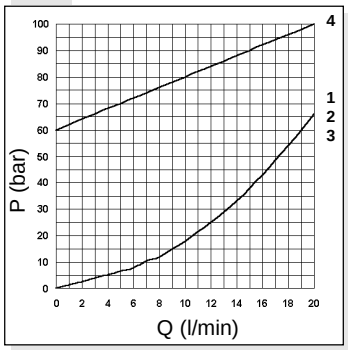

HYDRAULIC SYMBOLS

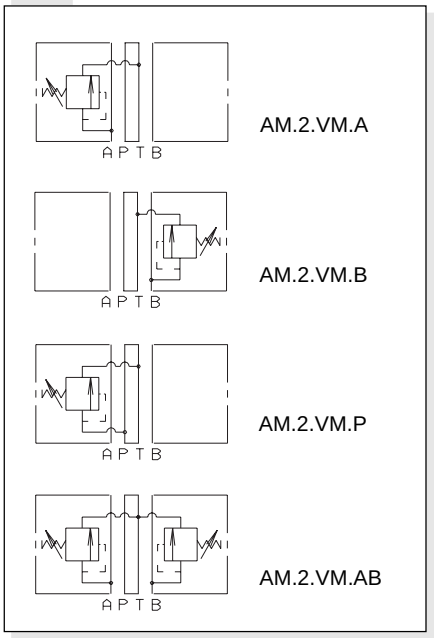

OVERALL DIMENSIONS

AM.2.VM.AB...

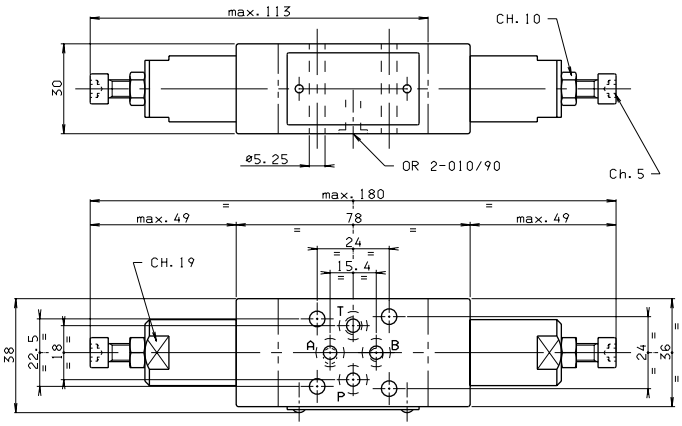
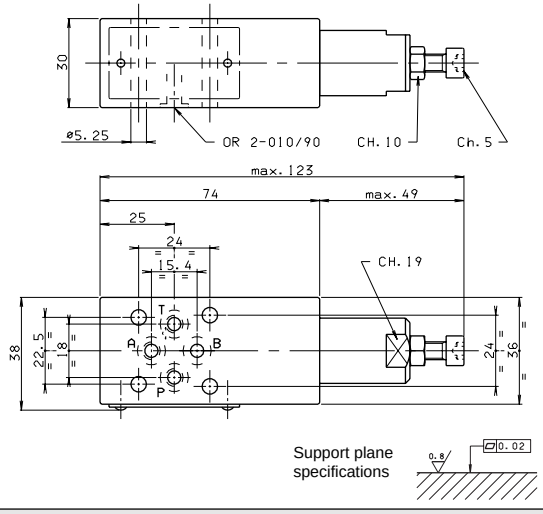
AM.2.VM.A/B/P...