CMP.20...

CMP.20... DIRECT OPERATION

MAXIMUM PRESSURE VALVES

Direct action pressure relief valves type CMP.20 are used to limit the maximum system pressure within their adjustable range (see diagram).

Max. operating pressure		250 bar
Setting ranges:	Spring 1	max. 30 bar
	Spring 2	max. 140 bar
	Spring 3	max. 250 bar
Max. flow		80 l/min
Hydraulic fluids		Mineral oils DIN 51524
Fluid viscosity		10 ÷ 500 mm²/s
Fluid temperature		-25°C ÷ 75°C
Ambient temperature		-25°C ÷ 60°C
Max. contamination level		class 10 in accordance with NAS 1638 with filter $ß_{25}$≥75
Weight		0,5 Kg
Tightening torque		80÷ 90 Nm (8 ÷ 9 Kgm)

• The minimum permissible setting pressure depending on the spring: see curves below

ORDERING CODE

CMP	Max. pressure cartridge valve
20	Size
*	Type of adjustment **M** = Plastic knob **C** = Grub screw **V** = Handwheel
*	Setting ranges **1** = max. 30 bar **(white spring)** **2** = max. 140 bar **(yellow spring)** **3** = max. 250 bar **(green spring)**
**	**00** = No variant **V1** = Viton
2	Serial No.

HYDRAULIC SYMBOL

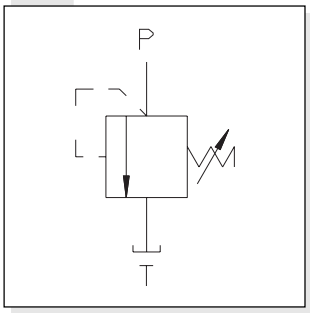

PRESSURE - FLOW

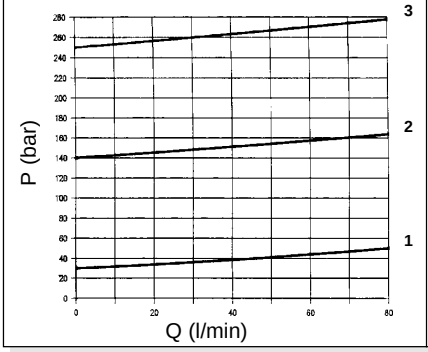

MINIMUM SETTING PRESSURE

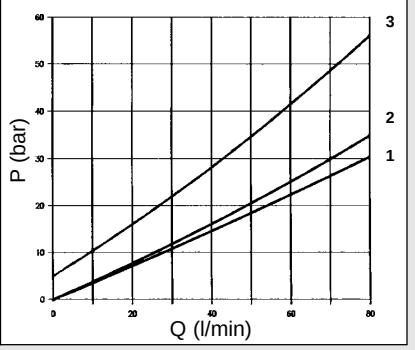

OVERALL DIMENSIONS

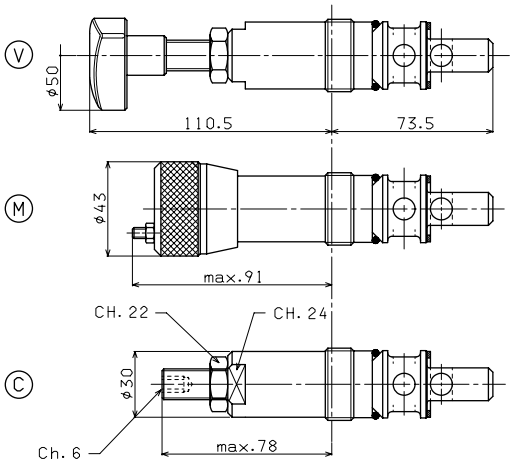

SEAT DIMENSIONS

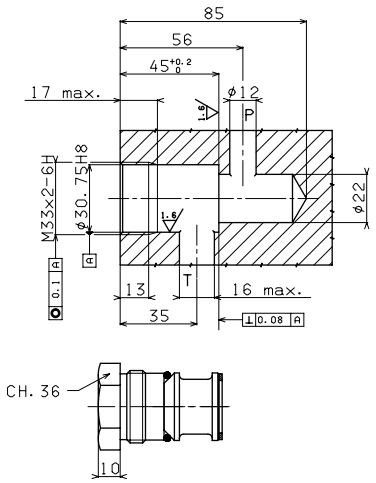

Type of adjustment

M Plastic knob

C Grub screw

V Handwheel

Valve seat plug code **R78.40.0568**